# *Energy Saver Clad Wood*

# *Sliding & French Sliding Patio Door Parts Pages for:*

## *Weatherstrip*


© 2009 Hurd Windows & Doors

# French Sliding Patio Door
## Replacement Parts

*Energy Saver Aluminum Clad Wood*

## Weatherstrip, Section Views & Parts

### French Sliding Patio Door (Wide Stile)

Stationary Unit, Side View

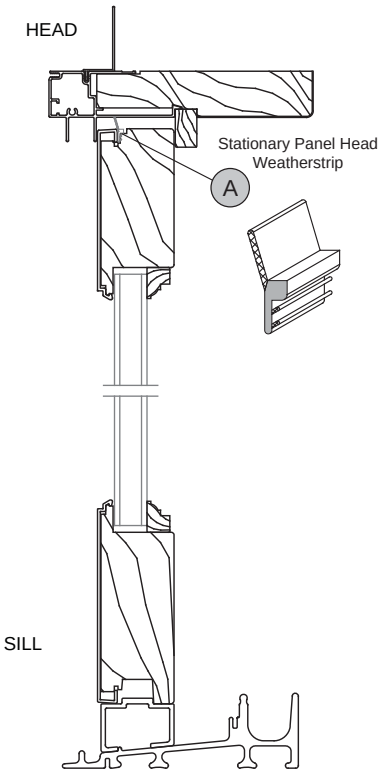


Operating Unit, Side View

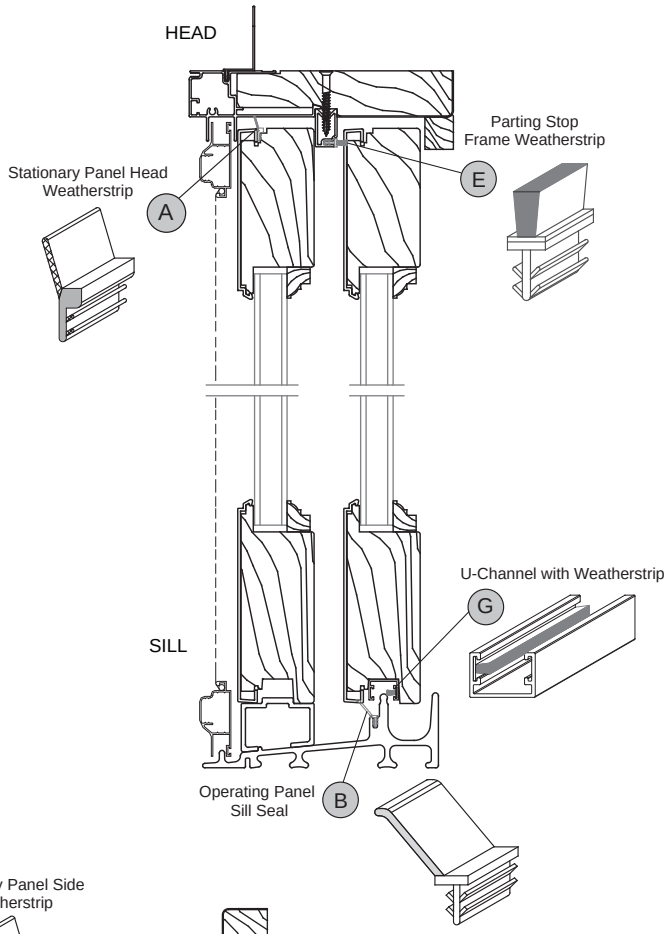


Stationary Unit, Top View

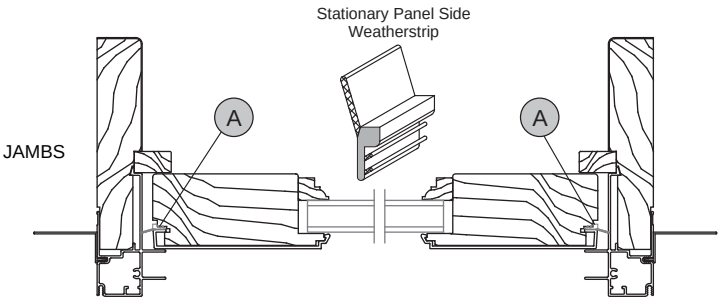


2-Wide Unit, Top View

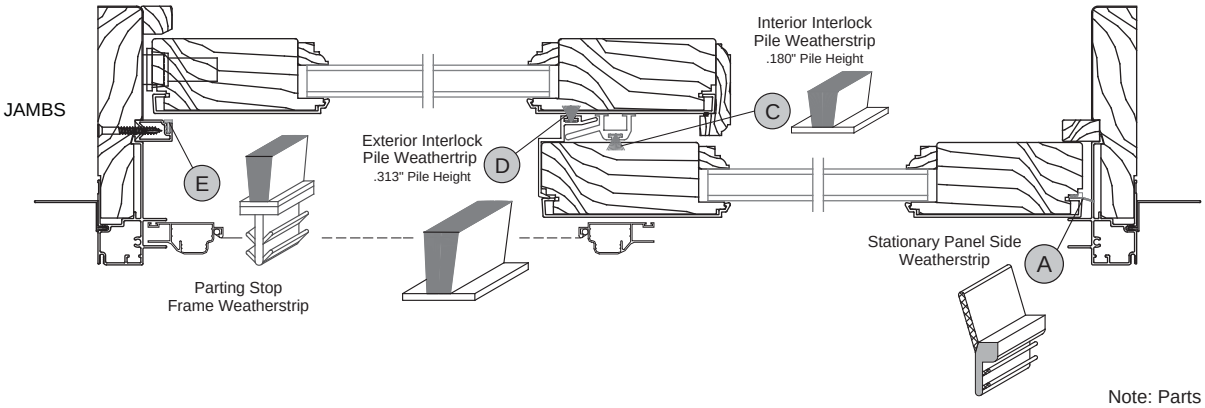


Note: Parts drawings not to scale.


© 2009 Hurd Windows & Doors

# French Sliding Patio Door Replacement Parts

*Energy Saver Aluminum Clad Wood*

Hurd Windows and Doors

## Weatherstrip, Section Views & Parts

### French Sliding Patio Door (Wide Stile)

Wide Stile 3-Wide OXO Top View

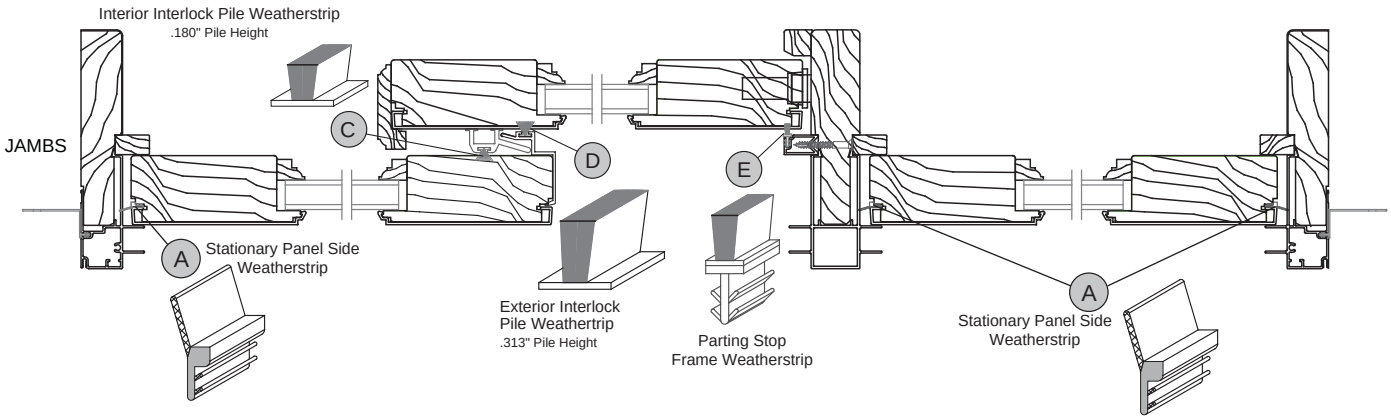


Wide Stile 3-Wide XXO Top View

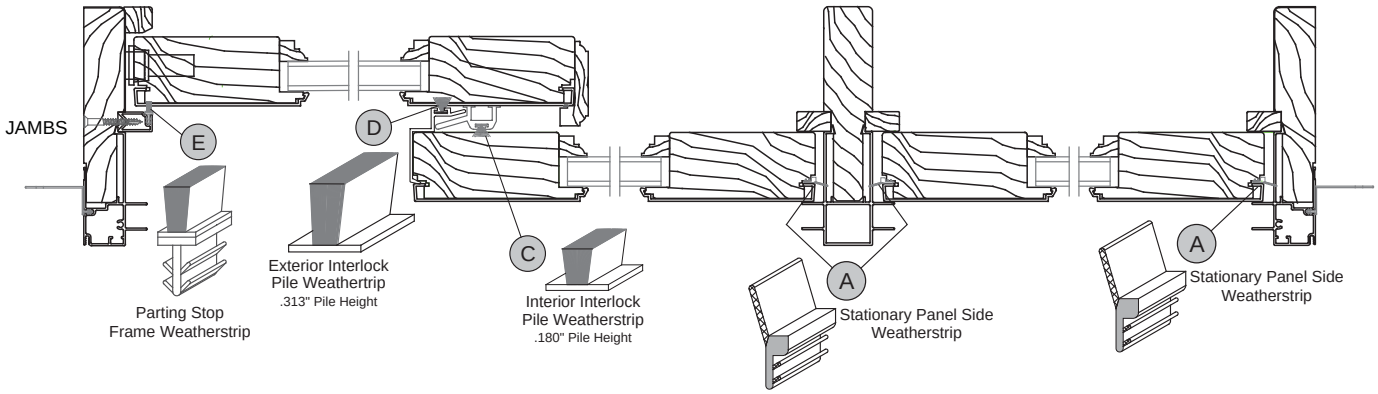


Wide Stile 4-Wide OXXO Top View

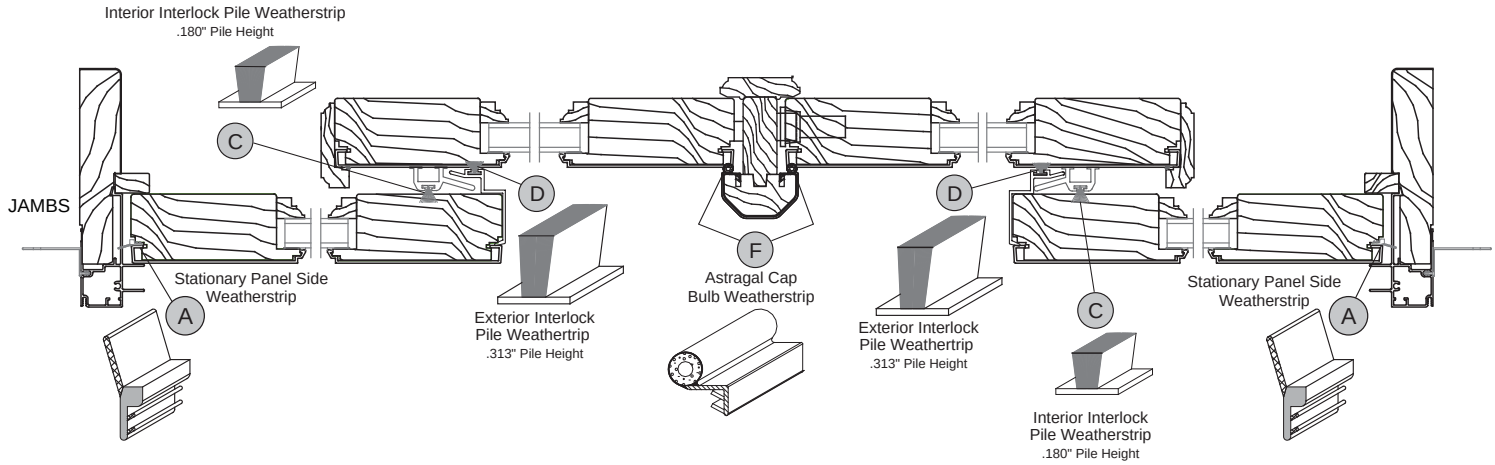


Note: Parts drawings not to scale. Screen not shown for clarity.


© 2009 Hurd Windows & Doors

# Sliding Patio Door
## Replacement Parts

*Energy Saver Aluminum Clad Wood*

## Weatherstrip, Section Views & Parts

### Standard Sliding Patio Door (Narrow Stile)

Stationary Unit, Side View

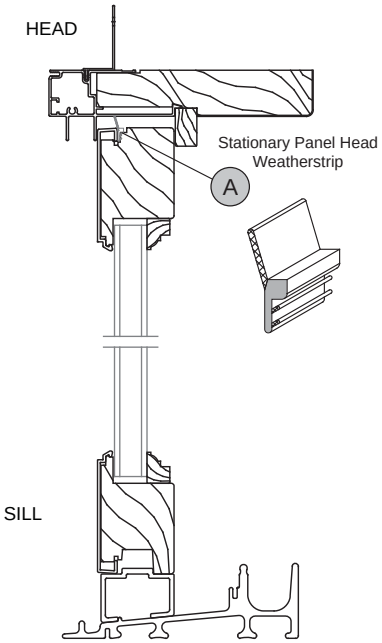


Operating Unit, Side View

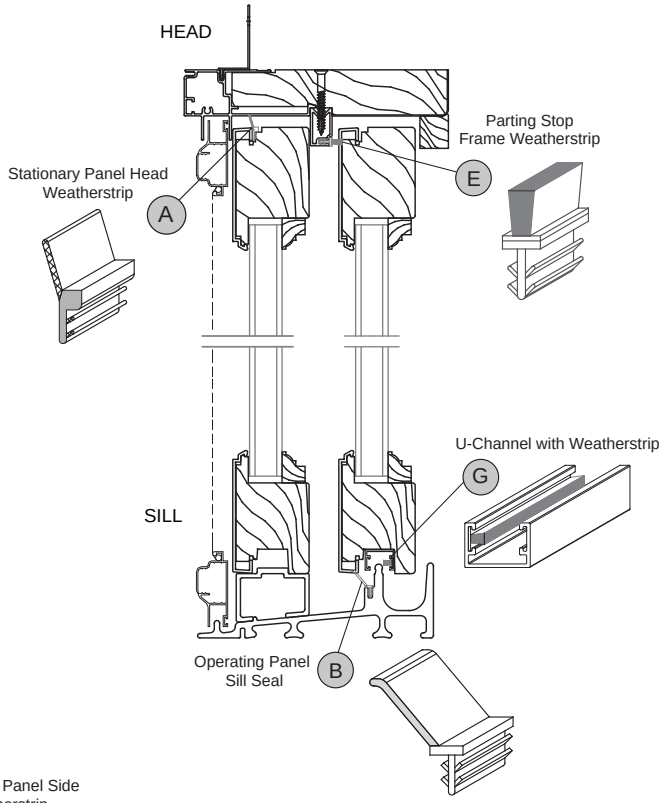


Stationary Unit, Top View

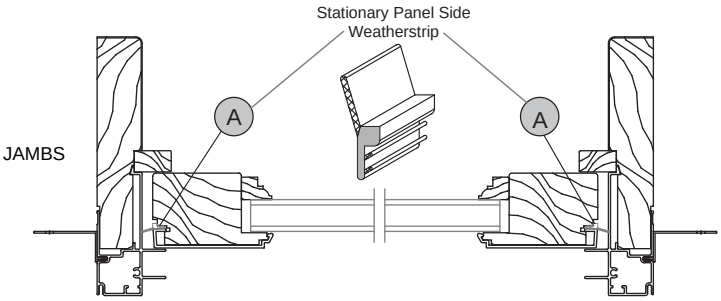


2-Wide Unit, Top View

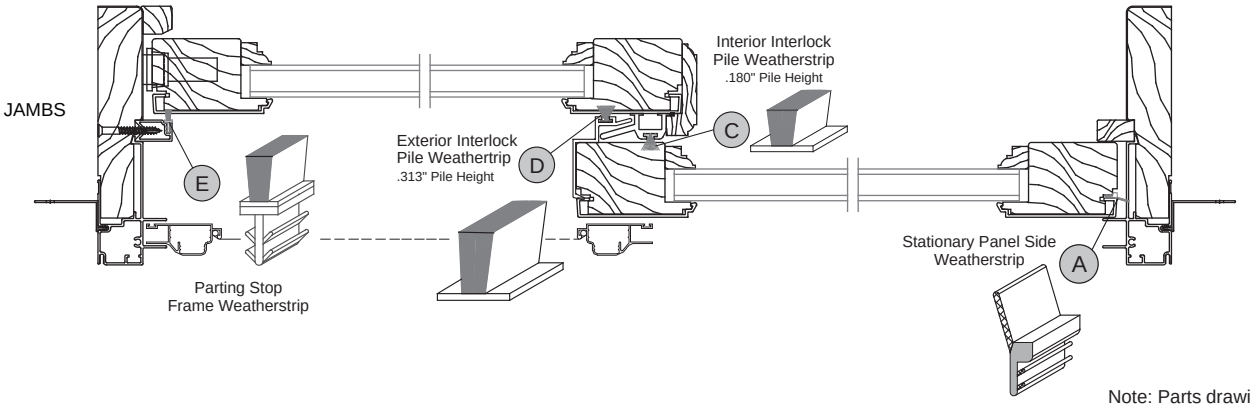


Note: Parts drawings not to scale.


© 2009 Hurd Windows & Doors

# Weatherstrip, Section Views & Parts

## Standard Sliding Patio Door (Narrow Stile)

### Narrow Stile 3-Wide OXO Top View

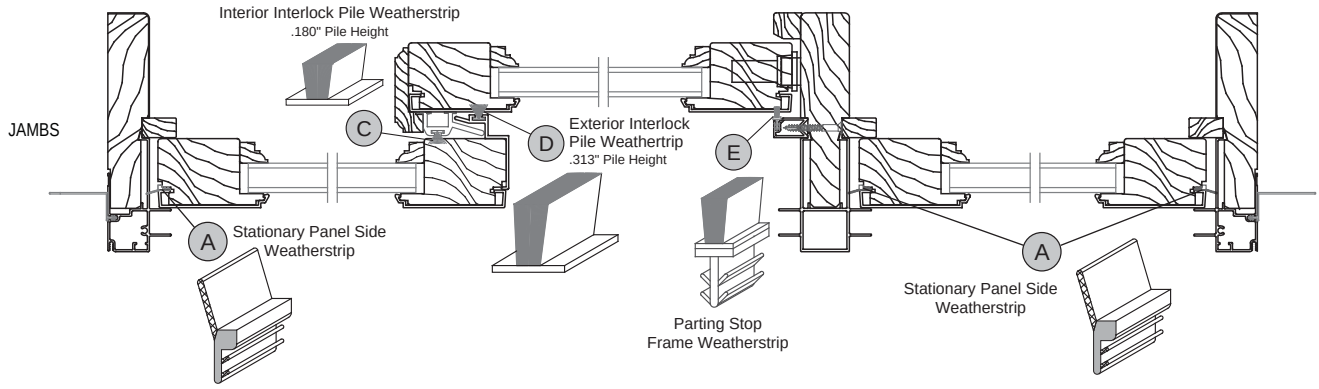


### Narrow Stile 3-Wide XXO Side View

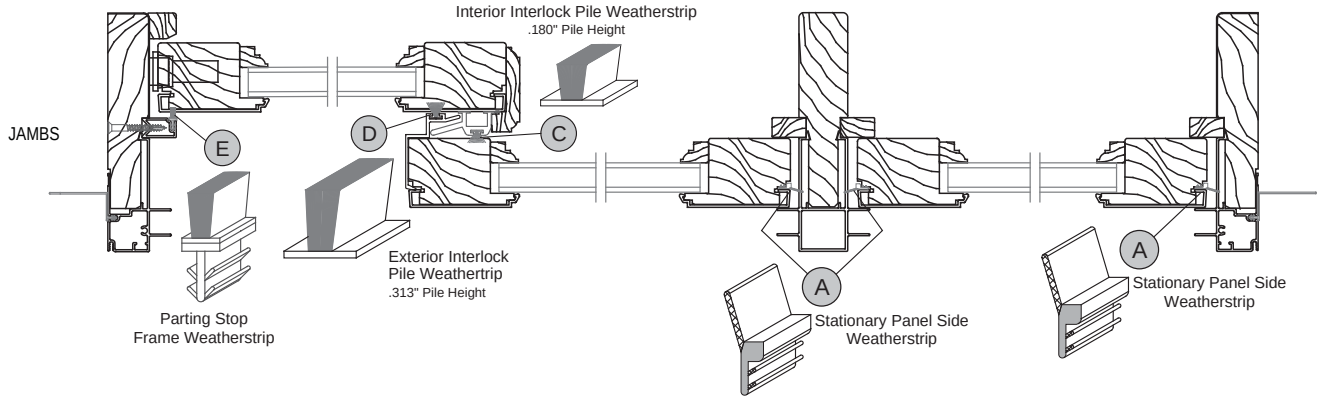


### Narrow Stile 4-Wide OXXO Side View

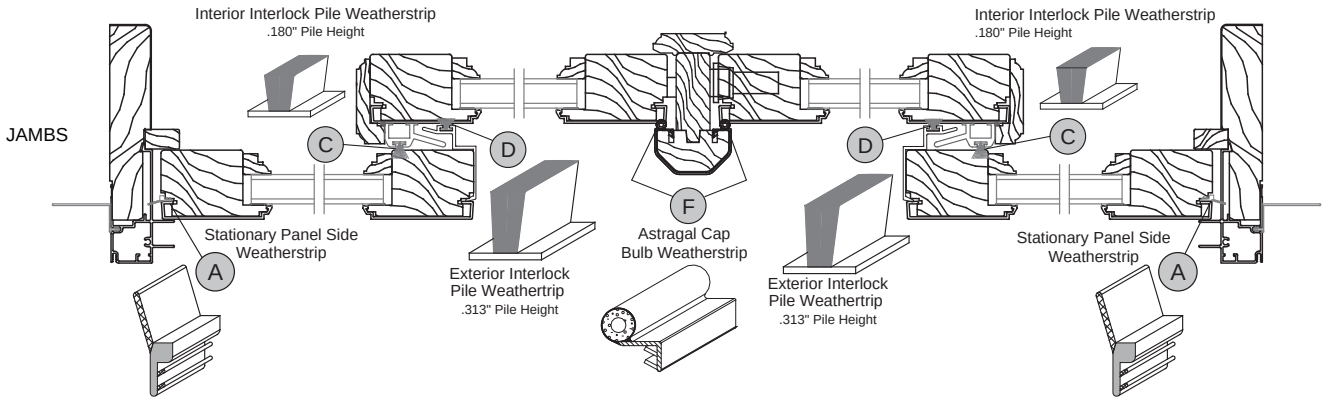


Note: Parts drawings not to scale. Screens not shown for clarity.

 © 2009 Hurd Windows & Doors 

# Sliding & French Sliding Patio Door
## Replacement Parts

*Energy Saver Aluminum Clad Wood*

## Weatherstrip, Section Views & Parts

| Part ID | Weatherstrip DESCRIPTION |
|---|---|
| A | Stationary Panel Head & Side |
| B | Operating Panel Sill Seal |
| C | Interior Interlock Pile Weatherstrip |
| D | Exterior Interlock Pile Weatherstrip |
| E | Parting Stop Frame Weatherstrip |
| F | 4 Wide Astragal Cap Foam Bulb Weatherstrip |
| G | U-Channel Weatherstrip |

### A Stationary Panel Head & Side Weatherstrip

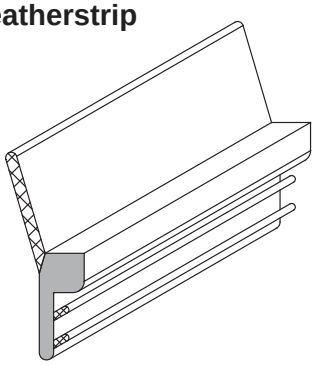

Sliding & French Sliding
1, 2, 3 & 4 Wide Doors

Rails (Head)

| Glass Size | DIM. A Length |
|---|---|
| 2-8 | 29 1/4" |
| 2-10 | 31 1/4" |
| 3-2 | 35 1/4" |
| 4-2 | 47 1/4" |
| 2-8 French | 29 7/8" |
| 2-10 French | 31 7/8" |
| 3-2 French | 35 7/8" |
| 4-2 French | 47 7/8" |

Stile (Sides)

| Glass Size | DIM. A Length |
|---|---|
| Retro | 77" |
| 6-10 | 80" |
| 7-2 | 84" |
| 8-0 | 93" |

Lineal Foot

| Color | Part # |
|---|---|
| White | 096603 |
| Sand | 096604 |
| Bronze | 096605 |

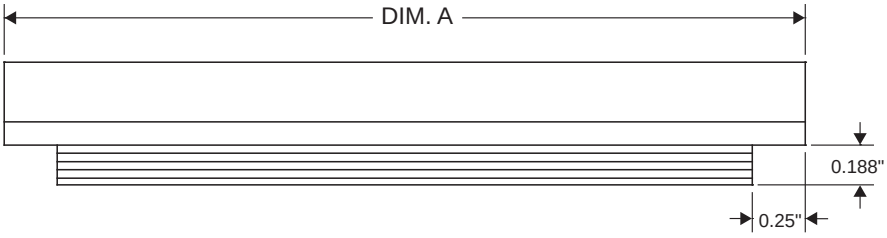


### B Operating Panel Sill Seal

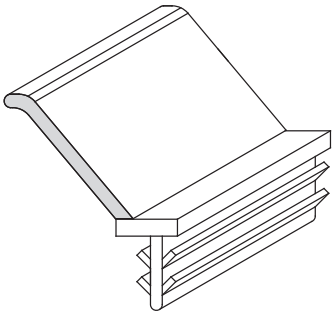

Sliding & French Sliding
2, 3 & 4 Wide Doors

| Glass Size | Length | Part # |
|---|---|---|
| 5-0 | 29" | 098753 |
| 5-4 | 31" | 098754 |
| 6-0 | 35" | 098755 |
| 8-0 | 47" | 098756 |
| 10-0 OXXO | 58 1/2" | 098757 |
| 12-0 OXXO | 70 1/2" | 098758 |
| 16-0 OXXO | 94 1/2" | 098759 |

Note: Parts drawings not to scale.


© 2009 Hurd Windows & Doors

# Sliding & French Sliding Patio Door

*Energy Saver Aluminum Clad Wood* Replacement Parts

Hurd Windows and Doors

## Weatherstrip Parts

### (C) Operator Interlock Pile Weatherstrip

**.180" Pile Height**

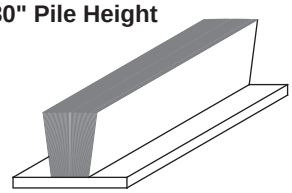

| Size | Length |
|---|---|
| Retro | 79" |
| 6-10 | 82" |
| 7-2 | 86" |
| 8-0 | 95" |

Lineal Foot Part# 024503

Sliding & French Sliding
2, 3 & 4 Wide Doors

### (D) Stationary Panel Interlock Pile Weatherstrip

**.313" Pile Height**

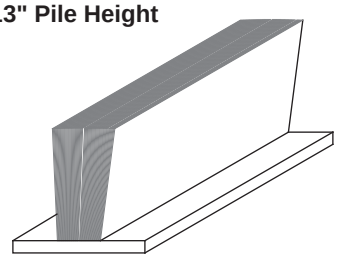

| Size | Length |
|---|---|
| Retro | 77 7/16" |
| 6-10 | 80 7/16" |
| 7-2 | 84 7/16" |
| 8-0 | 93 7/16" |

Lineal Foot Part# 097146

Sliding & French Sliding
2, 3 & 4 Wide Doors

### (E) Parting Stop Frame Weatherstrip

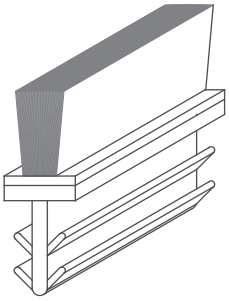

Head

| Glass Size | Length |
|---|---|
| 5-0 | 28 1/2" |
| 5-4 | 30 1/2" |
| 6-0 | 34 1/2" |
| 8-0 | 46 1/2" |
| 10-0 OXXO | 59 15/16" |
| 12-0 OXXO | 70 15/16" |
| 16-0 OXXO | 94 15/16" |

Jambs (Sides)

| Glass Size | Length |
|---|---|
| Retro | 78 5/16" |
| 6-10 | 81 5/16" |
| 7-2 | 85 5/16" |
| 8-0 | 94 5/16" |

Lineal Foot Part# 020406

Sliding & French Sliding
2, 3 & 4 Wide Doors

### (F) Astragal Cap Bulb Weatherstrip

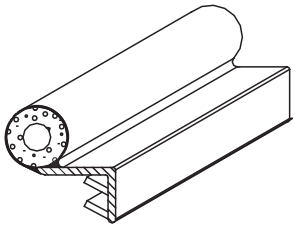

| Size | Length |
|---|---|
| Retro | 76 5/16" |
| 6-10 | 79 5/16" |
| 7-2 | 83 5/16" |
| 8-0 | 92 5/16" |

Lineal Foot Part # 092846

Sliding & French Sliding
4 Wide Doors

### (G) U-Channel with Weatherstrip Located at Bottom of Operating Panel

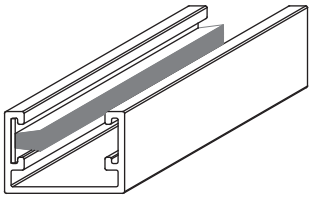

French Sliding

| Glass Size | Length | Part # |
|---|---|---|
| 5-0 | 29 7/8" | 098864 |
| 5-4 | 31 7/8" | 098865 |
| 6-0 | 35 7/8" | 098866 |
| 8-0 | 47 7/8" | 098867 |

Standard Sliding (Narrow Stile)

| Glass Size | Length | Part # |
|---|---|---|
| 5-0 | 29 1/4" | 098860 |
| 5-4 | 31 1/4" | 098861 |
| 6-0 | 35 1/4" | 098862 |
| 8-0 | 47 1/4" | 098863 |

Note: Parts drawings not to scale.


© 2009 Hurd Windows & Doors